AN3311K, AN3311S

Head Amplifier ICs for 4-Head VCR

■ Overview

The AN3311K and the AN3311S are integrated circuits designed for head amplifier circuits of 4-head VCR.

■ Features

- Built-in envelope comparing circuit.
- Built-in peaking amplifier circuit.
- Low input-conversion noise
- Supply voltage : V_{CC} = 5V

AN3311K

Unit : mm

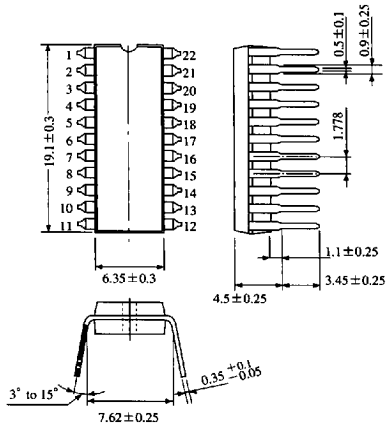

22-Pin Shrunk DIL Plastic Package (SDIP022-P-0300A)

AN3311S

Unit : mm

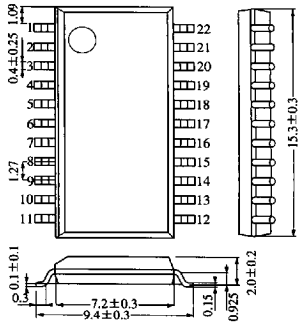

22-Pin PANAFLAT Package (SOP022-P-0375)

■ Block Diagram

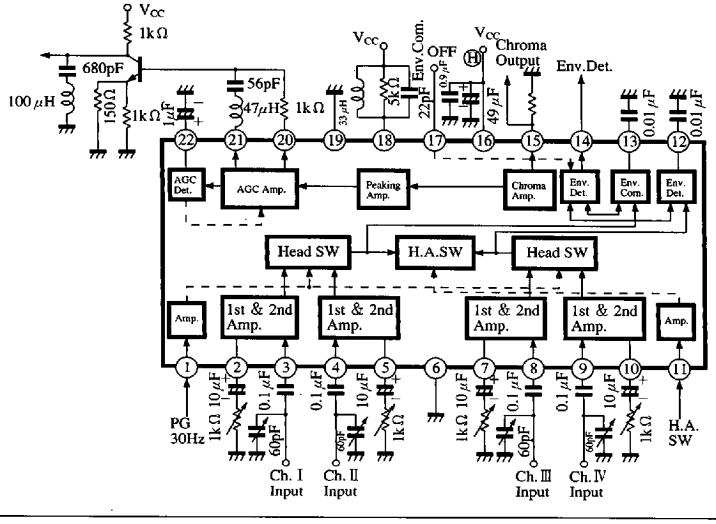

ICs for VCR

This Material Copyrighted By Its Respective Manufacturer